Physica Scripta. Vol. T118, 115–117, 2005

Time-to-Frequency Conversion of Optical Waveforms Using a Single Time Lens System

José Azaña[(1)*], Naum K. Berger[(2)], Boris Levit[(2)] and Baruch Fischer[(2)]

[(1)]Institut National de la Recherche Scientifique – Énergie, Matériaux et Télécommunications 800 de la Gauchetière Ouest, suite 6900, Montréal, Québec H5A 1K6 Canada
[(2)]Department of Electrical Engineering, Technion – Israel Institute of Technology, Haifa 32000, Israel

Received October 18, 2003; revised version received July 27, 2004; accepted August 13, 2004

PACS numbers: 42.87.−d; 42.30.kq

Abstract

Time-to-frequency conversion (*spectro-temporal imaging*) constitutes a simple and direct (single-shot) technique for the high-resolution measurement of fast optical temporal waveforms. Here, we experimentally demonstrate that spectro-temporal imaging of an optical pulse can be achieved with a *single* time lens (quadratic phase modulator) operating under the appropriate conditions (i.e. spectral Fraunhofer conditions). As compared with the conventional solution, our proposal avoids the use of an input dispersive device preceding the time lens, thus representing a much simpler and more practical alternative for implementing spectro-temporal imaging.

1. Introduction

Space-time duality is based on the analogy between the equations that describe the paraxial diffraction of beams in space and the first-order temporal dispersion of optical pulses in a dielectric [1]–[7]. The duality can also be extended to consider imaging lenses: the use of quadratic phase modulation on a temporal waveform is analogous to the action of a thin lens on the transverse profile of a spatial beam [1]–[6]. The time lens can be practically implemented using an electro-optic phase modulator driven by a sinusoidal RF signal [2], [4], [5]; by mixing the original pulse with a chirped pulse in a nonlinear crystal (sum-frequency generation) [3]; or by means of cross-phase modulation of the original pulse with an intense pump pulse in a nonlinear fiber [6]. Optical signal processing operations based on time lens include real-time Fourier transformation [1], [5], temporal imaging [2], [3] and spectro-temporal imaging (time-to-frequency conversion) [4]–[6]. This present work deals with a new regime in the interaction between optical pulses and time lenses. In particular, we experimentally demonstrate that when a time lens operates on an optical pulse, this pulse can enter a regime where the input pulse amplitude is mapped from the time domain into the frequency domain (time-to-frequency conversion). As schematically shown in Fig. 1, this regime can be interpreted as the *frequency-domain* dual of the temporal Fraunhofer regime (frequency-to-time conversion or real-time Fourier transformation by temporal dispersion [7]) and as a result, we will refer to it as *spectral Fraunhofer regime*.

Here, we derive the conditions for achieving time-to-frequency conversion using a single time lens as well as the expressions governing this operation. We also provide an experimental demonstration of the phenomenon using an electro-optic time lens. Among other potential applications, spectro-temporal imaging can be applied for the measurement of the intensity temporal profile of ultrashort optical pulses by directly measuring the optical spectrum (e.g. using a spectrum analyzer) of the pulse at the output of the system. In contrast with other approaches, this method provides a fast, direct (single-shot) and unambiguous measurement of the temporal waveform. Spectro-temporal imaging has been previously demonstrated using a system comprising a time lens preceded by a dispersive device in the appropriate balance [4]–[6]. As a main advantage, our proposal (using a single time lens operating in the spectral Fraunhofer regime) simplifies the design and implementation of spectro-temporal imaging systems since it avoids the use of a dispersive device preceding the time lens.

2. Theory on spectral Fraunhofer regime

In what follows, the involved signals are assumed to be spectrally centered at the optical frequency ω_0, we work with the complex temporal envelope of the signals and we ignore the average delay introduced by the time lens. A time lens is a phase-only modulator with a phase modulation function [2]

$$m(t) = \exp(j\phi(t)) \propto \exp(j[\ddot{\phi}_t/2]t^2) \tag{1}$$

where $\ddot{\phi}_t = [\partial^2\phi(t)/\partial t^2]_{t=0}$ is the phase-factor of the time lens. Let us now evaluate the action of the time lens over a given *arbitrary* optical pulse $c(t)$. The output pulse $d(t)$ from the time lens in response to the input pulse $c(t)$ is given by $d(t) = c(t)m(t)$. In the frequency domain, the product can be described as a convolution $D(\omega) = C(\omega) * M(\omega)$, where $D(\omega)$ and $C(\omega)$ are the Fourier transforms of $d(t)$ and $c(t)$, respectively, and $M(\omega)$ is the Fourier transform of the time-lens modulation function, $M(\omega) \propto \exp(-j[1/2\ddot{\phi}_t]\omega^2)$. At this point, we note that since we are working with the complex temporal envelope of the signals, the variable ω is the base-band frequency variable, i.e. $\omega = \omega_{opt} - \omega_0$, ω_{opt} being the optical frequency variable. We derive that

$$\begin{aligned} D(\omega) = C(\omega) * M(\omega) &\propto \int_{\Delta\omega} C(\Omega)\exp(-j[1/2\ddot{\phi}_t][\omega-\Omega]^2)\mathrm{d}\Omega \\ &\propto M(\omega)\int_{\Delta\omega} C(\Omega)\exp(-j[1/2\ddot{\phi}_t]\Omega^2) \\ &\quad\times \exp(j[1/2\ddot{\phi}_t]\omega\Omega)\,\mathrm{d}\Omega \end{aligned} \tag{2}$$

where $\Delta\omega$ is the total spectral bandwidth of the input pulse $c(t)$ $[\Delta\omega \ll \omega_0]$ and the integration variable Ω is a base-band frequency. If this bandwidth is sufficiently narrow so that

$$|\ddot{\phi}_t| \gg \frac{\Delta\omega^2}{8\pi} \tag{3}$$

*e-mail: azana@inrs-emt.uquebec.ca

© Physica Scripta 2005

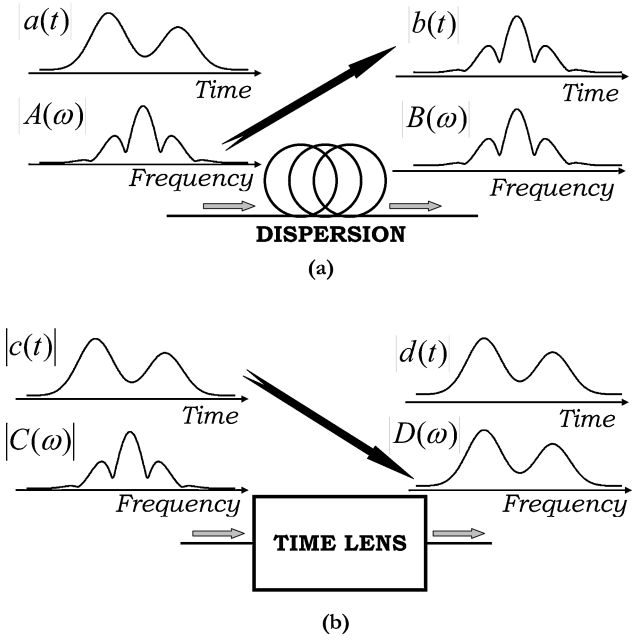

Fig. 1. Dual Fraunhofer regimes: **(a)** frequency-to-time conversion (real-time Fourier transformation) using dispersion and **(b)** time-to-frequency conversion (spectro-temporal imaging) using a single time lens.

then the phase term $\exp(-j[1/2\ddot{\phi}_t]\Omega^2)$ within the last integral in Eqn. (2) can be neglected, since $|(1/2\ddot{\phi}_t)\Omega^2| < (1/2|\ddot{\phi}_t|)(\Delta\omega/2)^2 \ll \pi$. In this case, Eqn. (2) can be approximated by

$$D(\omega) \propto M(\omega)\int_{\Delta\omega} C(\Omega)\exp(j[1/\ddot{\phi}_t]\omega\Omega)\,\mathrm{d}\Omega = M(\omega)c(t=\omega/\ddot{\phi}_t). \tag{4}$$

The last integral has been solved by considering $\exp(j[1/\ddot{\phi}_t]\omega\Omega)$ as the *kernel* of a Fourier transformation. Eqn. (4) indicates that under the conditions of inequality (3) (*spectral Fraunhofer condition*), the spectrum of the output pulse $D(\omega)$ is, within a phase factor $[M(\omega)]$, proportional to the input temporal waveform $c(t)$, evaluated at the instant $t = \omega/\ddot{\phi}_t$ [see Fig. 1(b)]. The inequality (3) can be interpreted as a condition for the phase-factor (chirp) of the time lens $|\ddot{\phi}_t|$, depending on the fastest temporal feature of the input optical signal to be measured $\delta t \approx 2\pi/\Delta\omega$ (i.e. depending on the required temporal resolution δt). Specifically, according to Eqn. (3), the shorter (faster) the temporal feature to be resolved the larger the phase-factor of the time lens must be.

3. Experimental demonstration

Fig. 2 shows a schematic of our experimental arrangement to observe the spectral Fraunhofer regime. An actively mode-locked laser diode with an external resonator based on a uniform fiber Bragg grating (FBG-1) was used as the optical pulse source. The source generated optical pulses at a repetition rate of 0.99 GHz centered at a wavelength of 1548 nm. The generated pulses were non-transform limited (chirped) nearly Gaussian pulses. These pulses were subsequently compressed to a time-width of ≈17.5 ps using dispersion compensating fiber. The compressed pulses were conveniently reshaped by means of a FBG-based optical pulse shaper, consisting of two consecutive uniform FBGs (FBG-2 and FBG-3). In particular, the FBGs were specifically designed to generate a non-symmetric double pulse [see Fig. 3(b)] from the input Gaussian pulses. The

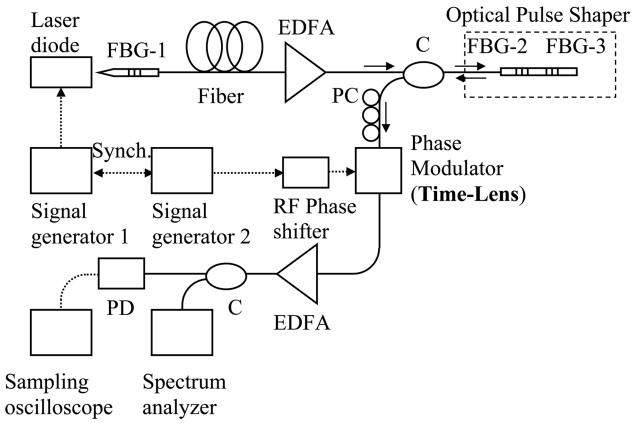

Fig. 2. Schematic of the experimental setup. Solid [dotted] lines are used for optical [electrical] signals. FBG: fiber Bragg grating; EDFA: Erbium-doped fiber amplifier; C: fiber coupler; PC: polarization controller; PD: photodetector.

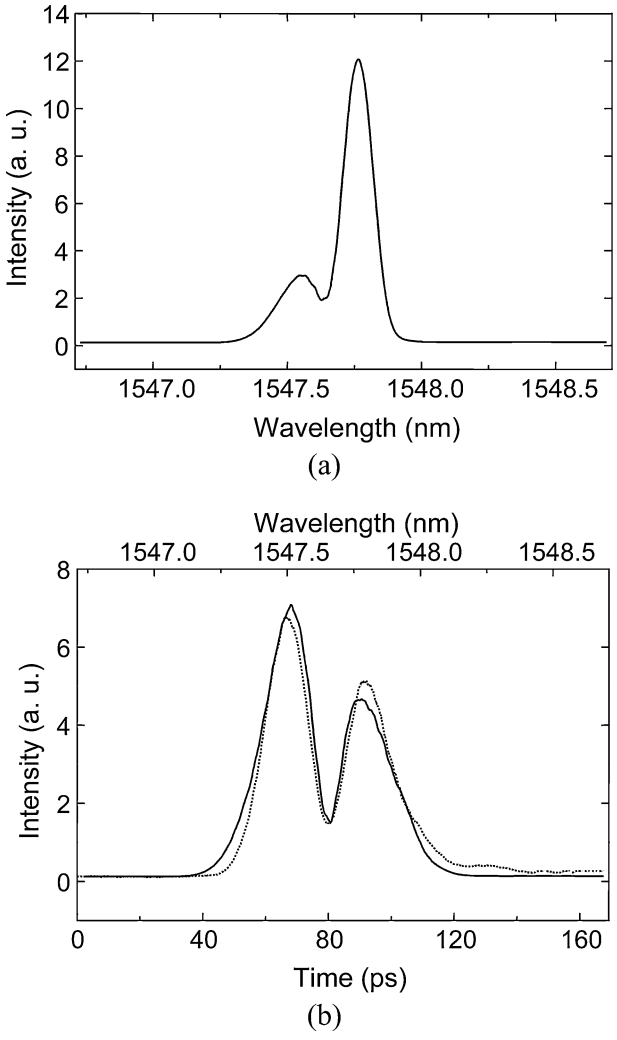

Fig. 3. Experimental results: **(a)** measured spectrum of the input pulse to the time lens; **(b)** measured spectrum of the output pulse from the time lens (solid curve, top scale) and measured temporal waveform of the input pulse to (output pulse from) the time lens (dotted curve, bottom scale).

gratings FBG-2 and FBG-3 were written in a boron-doped photosensitive fiber by cw UV radiation ($\lambda = 244$ nm) using the phase-mask technology. The FBGs were 0.3-mm long and were spaced apart by 0.3 mm. The measured reflectivities of the gratings were 5.3% and 4.8%, respectively. In order to obtain the desired temporal optical waveform (non-symmetric double

 © Physica Scripta 2005

pulse, as shown in Fig. 3(b)), it was required to introduce a π-phase shift between the reflection coefficients corresponding to the two individual gratings, FBG-2 and FBG-3. A $LiNbO_3$ electro-optic modulator, driven by a sinusoidal RF modulation signal, was used as the time lens mechanism [2], [4], [5]. The modulation frequency and modulation index (amplitude) were fixed to $\omega_m = 2\pi 9.9\,\mathrm{GHz} \times \mathrm{rad}$ and $A = 2.4\,\mathrm{rad}$, respectively. With these values, the phase-factor of the time lens can be estimated as $|\ddot{\phi}_t| \approx A\omega_m^2 \approx 9286.27\,\mathrm{GHz}^2 \times \mathrm{rad}$ [2]. Note that the two RF signal generators used to drive the mode-locked laser diode and the electro-optic phase modulator (time-lens), respectively, were synchronized by means of a signal operating at 10 MHz. We also note that the required synchronization between the incoming optical pulses and the modulation RF signal in the time lens was ensured using a RF phase shifter. Finally, the optical signals were measured in the temporal domain using a fast photodetector (PD) followed by a sampling oscilloscope, both providing a bandwidth of $\approx$50 GHz. For their measurement in the spectral domain, we used a conventional optical spectrum analyzer providing a resolution of $\delta\lambda \approx 0.015$ nm.

Fig. 3(a) shows the measured energy spectrum of the input pulse (before the time lens).The total bandwidth of the input optical pulse is estimated to be $\Delta\lambda \approx 0.5$ nm ($\Delta\omega \approx 2\pi 62.5\,\mathrm{GHz} \times \mathrm{rad}$). For the parameters used, the spectral Fraunhofer condition [Eqn. (3)] is satisfied but in the form $|\ddot{\phi}_t| > \Delta\omega^2/8\pi$. Fig. 3(b) (solid curve) shows the measured energy spectrum of the output pulse (after the time lens). For comparison, the measured temporal waveform of the input (output) pulse is also shown in Fig. 3(b) (dotted curve). The time and wavelength scales in Fig. 3(b) are related according to Eqn. (4) by $t - t_0 \approx -(2\pi c/\lambda_0^2 \ddot{\phi}_t)(\lambda - \lambda_0)$, where c is the speed of light in vacuum and t_0 and λ_0 are the central instant and wavelength of the optical pulse, respectively. Our experimental results confirmed our theoretical predictions. As expected, the energy spectrum of the optical pulse at the output of the time lens is an image of the temporal optical waveform at the input of the time lens, according to the relation given by Eqn. (4). In other words, an efficient spectro-temporal imaging process is achieved.

4. Conclusions

In summary, we have demonstrated a new regime (spectral Fraunhofer regime) in the interaction between optical pulses and time lenses. In this regime, the temporal waveform of the input pulse is mapped into the spectral domain by the action of a time lens. Based on this idea, simplified spectro-temporal imaging systems, comprising a *single* time lens, can be implemented. These systems can be applied for measuring ultrafast temporal waveforms and we estimate that sub-picosecond/femtosecond resolutions could be achieved using current technology.

References

1. Jannson, T., Opt. Lett. **8**, 232 (1983).
2. Kolner, B. H., IEEE J. Quantum Electron. **30**, 1951 (1994).
3. Bennett, C. V. and Kolner, B. H., Opt. Lett. **24**, 783 (1999).
4. Kauffman, M. T., Banyai, W. C., Godil, A. A. and Bloom, D. M., Appl. Phys. Lett. **64**, 270 (1994).
5. Berger, N. K., Levit, B., Atkins, S. and Fischer, B., Electron. Lett. **36**, 1644 (2000).
6. Mouradian, L. K. H., Louradour, F., Messager, V., Barthelemy, A. and Froehly, C., IEEE J. Quantum Electron. **36**, 795 (2000).
7. Azaña, J. and Muriel, M. A., IEEE J. Quantum Electron. **36**, 517 (2000).

© *Physica Scripta 2005*